***11,000 gallons per day with FAST pretreatment-Includes all holding tank and septic tank waste.***

*Preliminary opinion of probable cost (POPC)*

| | | |
|---|---|---|
| 1 ea. | 18,000 gallon septic tank | $20,000 |
| 1 ea. | 18,000 gallon equalization/surge tank | $20,000 |
| 3 ea. | 9,100 gallon for FAST | $99,000 |
| 1 ea. | 4,000 gallon dose tank | $5,000 |
| 1 ea. | 4,000 gal. dose tank, L.S. | $7,000 |
| 1 ea. | Pumps,controls,FAST | $55,000 |
| 4600 l.f. | Drain field/EZFlow media @ $5/ft | $23,000 |
| 4600 l.f. | Trench excavation @ $5/ft | $23,000 |
| 4600 l.f. | Pressure piping @ $2/l.f. | $9,200 |
| 500 l.f. | Force main @ $20/l.f. | $10,000 |
| 1 ea. | Valves and fittings, L.S. | $4,000 |
| 1 ea. | Excavation for tanks | $8,500 |
| 500 l.f. | Access road @ $10/l.f. | $5,000 |
| 1 ea. | Electric service | $10,000 |
| 1 ea. | Well | $5,000 |
| 1 ea. | Mobilization/trucking | $10,000 |
| 450 l.f. | 6' high chain link fence @ $20/ft | $9,000 |
| 1 ea. | Storage/control shed | $12,000 |
| 1 ea. | Security camera system | $6,000 |
| 1 ea. | Headwaters metering system | $50,000 |
| 1 ea. | Flush valves at ball park site | $6,000 |
| | Subtotal | $396,700 |
| | 10% Contingency | $39,670 |
| | Engineering | $32,000 |
| | Review Fees/Permit Fees | $3,500 |
| | Attorney Fees | $9,580 |
| | Preliminary Eng Report | $17,950 |
| | Facilities Plan Amendment | $12,000 |
| | Inspection | $7,600 |
| | **P.O.P.C.** ($47.18/gallon) | **$519,000** |

FAST system/pumps cost

- 1 ea. Filter @ $450
- Effluent pumps to FAST @ $1,258
- Guide rail assemblies/extensions @ $2,168
- Floats/brackets @ $1,771
- FAST 9.0/on-site support @ $30,405
- Dispersal system in dosing tank @ $14,130
- Start up/support @ $600
- TOTAL = $50,782 (increased to $55,000 for additional panel, etc for additional FAST)

Operational Budget- Washington Island Wastewater System

Monthly debt repayment expense:

- Initial cost per estimate: $519,000 (includes metering of head works, security, shed, engineering, atty fees,flush valves and repairs to existing ballpark system and all equipment and labor)
- Total capital cost: $519,000
- Anticipated 40 year amortization at 2.75% per USDA.
- **Total semi-annual P&I payment of $10,704 ($1,784/month)**

Monthly operational expenses:

- Administrative staff time: $500
- Maintenance staff to plow snow to system, cut grass, and maintain grounds of new system : $500
- Electricity: $550 main + $100 ball park= $650
- Insurance both systems: $100
- Staff system inspection: $250
- Average lab analysis of effluent quality collection and testing: $350
- Remote monitoring fees: $50
- Plumber repair/service allowance: $250
- **Total monthly operational expenses: $2,650**

Capital replacement fun for Short Lived Assets based on 5, 10, and 15 year replacement categories from the information provided by Petersen Management Company:

10 year replacement used for underwriting purposes.

- SaniTEE Effluent Filter: $525/10 years = $53.00/year
- Pumps for EQ Tank: ($620 each * 3 pumps)/ 10 years = $186/year
- Blowers: ($1100 each * 3 blowers)/10 years = $330/year
- Pumps for Dosing System: ($3667 * 3 pumps)/10 years = $1100/year
- Blower ballpark system $1100/10 years = $110/year
- Pumps ballpark system $500 each * 4 pumps/10years= $200/year
- Total yearly capital replacement fund = $1,979
- **Total monthly replacement fund: $165**
- Refer to attached breakdown of equipment life spans and replacement costs provided by Petersen Management Company.

***TOTAL MONTHLY BUDGET FOR SYSTEM DEBT REPAYMENT, OPERATION, REPAIRS, AND REPLACEMENT FUND = $4,599***

## 2012 Utility District Costs

| | Jan | Feb | Mar | Apr | May | June | July | Aug | Sept | Oct | Nov | Dec | Jan '13 | | Jan Totals |
|---|---|---|---|---|---|---|---|---|---|---|---|---|---|---|---|
| **Ballfield FAST Maint/Repair** | | | | | | | | | | | | | | | |
| Testing | $ 54.00 | $ 27.00 | $ 27.00 | $ 54.00 | $ 27.00 | $ 27.00 | $ 54.00 | $ 40.00 | $ 27.00 | $ 54.00 | $ 27.00 | | | | $ 418.00 |
| Repair | | | | | | | | $ 40.00 | $ 75.00 | | | | | | $ 115.00 |
| Maintenance | | | | $ 4.47 | | $ 1.49 | | | | $ 2.99 | $ 14.10 | | | | $ 23.05 |
| Inspections | | | | | | | $ 303.00 | | | | | $ 350.00 | | | $ 653.00 |
| | | | | | | | | | | | | | | | $ - |
| Ballfield Electricity | | | | | $ 1,411.90 | | | | $ 1,007.40 | | | $ 664.70 | | | $ 3,084.00 |
| | | | | | | | | | | | | | | | **$ 4,293.05** |
| **Fields** | | | | | | | | | | | | | | | |
| Land Lease Payment | | | | | | | | | | | | | | | $ 11,397.51 |
| Hansen | | | | | | | | | | | | $ 5,269.26 | | | $ 5,269.26 |
| Jordan | | | | | | | | | | | | $ 6,128.25 | | | $ 6,128.25 |
| Lime/Ph Purchased | | | | | $ 2,757.00 | $ 201.38 | | | | | | | | | $ 2,958.38 |
| | | | | | | | | | | | | | | | **$ 14,355.89** |
| **Employee Costs** | | | | | | | | | | | | | | | |
| Wages | $ 419.81 | $ 831.30 | $ 578.65 | $ 220.05 | $ 317.85 | $ 497.15 | $ 594.95 | $ 872.05 | $ 586.80 | $ 407.50 | $ 415.65 | $ 627.55 | | | $ 6,369.31 |
| Fringes | | | | | | | | | | | | | | | $ - |
| Retirement | $ 24.77 | $ 49.05 | $ 34.14 | $ 12.98 | $ 18.75 | $ 29.33 | $ 35.10 | $ 51.45 | $ 34.62 | $ 24.04 | $ 25.97 | $ 37.03 | | | $ 377.23 |
| Payroll Taxes | $ 32.11 | $ 63.59 | $ 44.27 | $ 16.83 | $ 24.32 | $ 38.04 | $ 45.52 | $ 66.71 | $ 44.89 | $ 31.17 | $ 31.79 | $ 48.00 | | | $ 487.24 |
| | | | | | | | | | | | | | | | **$ 7,233.78** |
| **Administrative** | | | | | | | | | | | | | | | |
| Phone/Internet | | | | | | | | | $ 42.99 | $ 42.99 | $ 43.99 | $ 43.99 | | | $ 173.96 |
| Insurance | $ 232.39 | | | | | | | | | | | | | | $ 232.39 |
| Office Supplies | | | $ 18.87 | $ 34.19 | $ 283.04 | | | $ 131.72 | | $ 24.28 | | $ 199.21 | | | $ 691.31 |
| Postage | | | | | | | | | | | | $ 90.00 | | | $ 90.00 |
| Bank Charges | | | | | $ 1.76 | | | | | | | $ 12.40 | | | $ 14.16 |
| Computer Software | $ 948.00 | | | | | | | | | | | | 948.00 | | $ 948.00 |
| | | | | | | | | | | | | | | | **$ 2,149.82** |
| **Miscellaneous** | | | | | | | | | | | | | | | |
| Training/Travel | | | | | | | | | | | | | | | $ - |
| Licenses & Permits | | | | | | | | | | | | | | | $ - |
| | | | | | | | | | | | | | | | **$ -** |
| **New FAST System Costs** | | | | | | | | | | | | | | | |
| Engineering Study | | | | | | | | | | 16,155.00 | 4,295.00 | | 4,800.00 | | $ 20,450.00 |
| Test Holes Back Hoe | | | | | | | | 300.00 | | | 160.00 | | | | $ 460.00 |
| Survey | | | | | | | | | | | 1,855.00 | | | | $ 1,855.00 |
| | | | | | | | | | | | | | | | **$ 22,765.00** |

**2012 Utility District Costs**

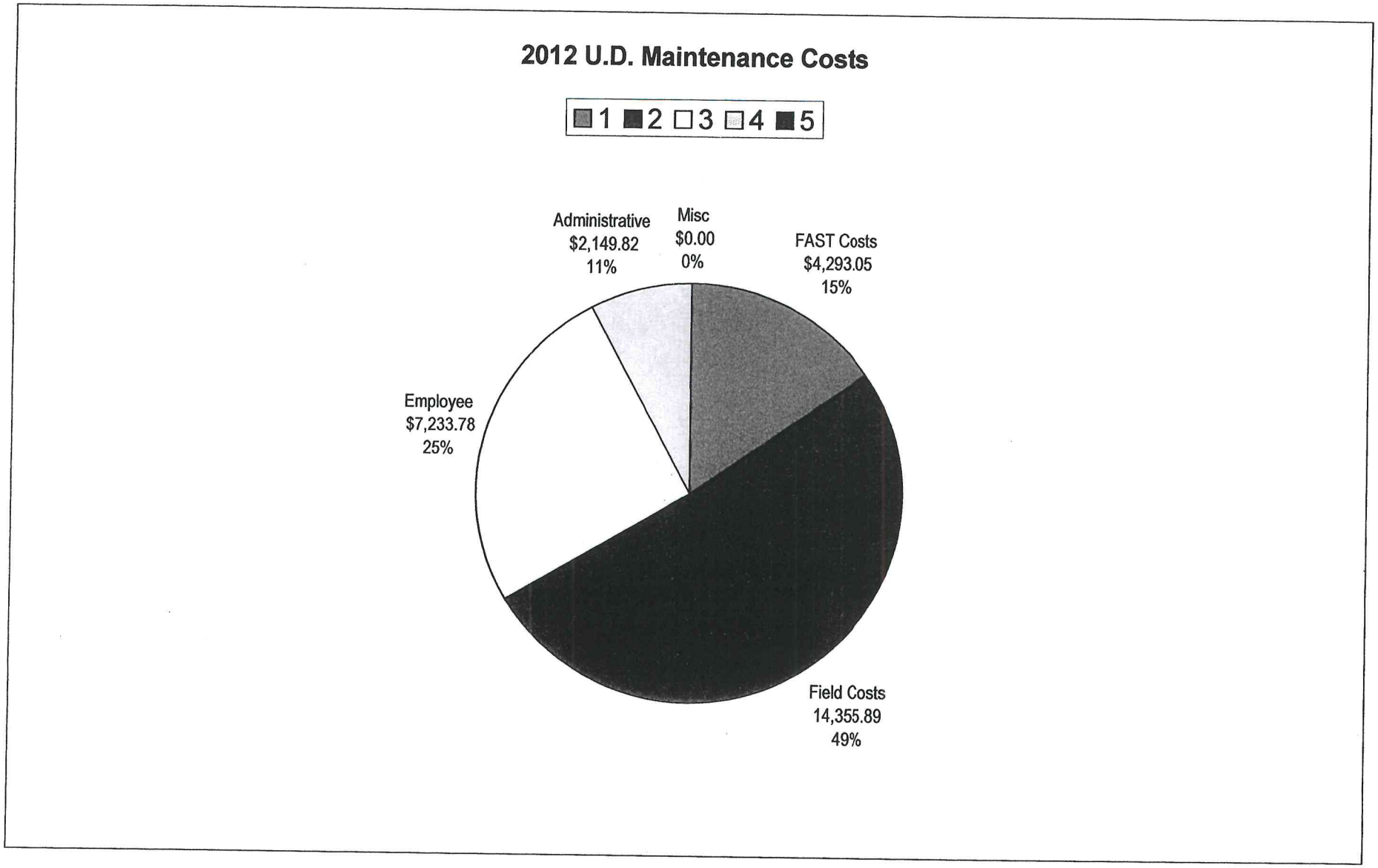

PETERSEN MANAGEMENT COMPANY

WASHINGTON ISLAND DUMP STATION

# CAPITAL REPLACEMENT EXPENSES (ESTIMATED)

www.petersenonsite.com

January 14, 2013

## ESTIMATED LIFE SPAN AND COSTS FOR WASTEWATER TREATMENT FACILITY PROJECT

## LIST OF ASSETS

### SEPTIC TANK

| Part Name | # of Parts | Estimated Life Span (Years) | Replacement Cost | Est. Replacement Costs | Est. 20 year Material Costs | Avg. Material Costs Per Year |
|---|---|---|---|---|---|---|
| SaniTEE Effluent Filter | 1 | 12 | $525.00 | $525.00 | $875.00 | $43.75 |
| | | | | $525.00 | $875.00 | $43.75 |

### PRETREATMENT EQUALIZATION TANK

| Part Name | # of Parts | Estimated Life Span (Years) | Replacement Cost | Est. Replacement Costs | Est. 20 year Material Costs | Avg. Material Costs Per Year |
|---|---|---|---|---|---|---|
| Red Jacket 2EP0532 Pumps | 3 | 12 | $620.00 | $1,860.00 | $3,100.00 | $155.00 |
| Pump Guide Rails | 3 | 20 | $1,553.00 | $4,659.00 | $4,659.00 | $232.95 |
| OPTI FLOAT Float Switches | 4 | 30 | $375.00 | $1,500.00 | $1,000.00 | $50.00 |
| Float Bar | 1 | 20 | $103.00 | $103.00 | $103.00 | $5.15 |
| | | | | $8,122.00 | $8,862.00 | $443.10 |

### FAST/ABCN PRETREATMENT SYSTEMS

| Part Name | # of Parts | Estimated Life Span (Years) | Replacement Cost | Est. Replacement Costs | Est. 20 year Material Costs | Avg. Material Costs Per Year |
|---|---|---|---|---|---|---|
| MicroFAST 9.0 | 3 | 50 | $25,450.00 | $76,350.00 | $30,540.00 | $1,527.00 |
| FAST 5hp Blower | 3 | 12 | $1,100.00 | $3,300.00 | $5,500.00 | $275.00 |
| Blower Hardware | 3 | 30 | $250.00 | $750.00 | $500.00 | $25.00 |
| Blower Housing | 3 | 30 | $1,000.00 | $3,000.00 | $2,000.00 | $100.00 |
| | | | | $7,050.00 | $8,000.00 | $400.00 |

### FIELD DOSING SYSTEM

| Part Name | # of Parts | Estimated Life Span (Years) | Replacement Cost | Est. Replacement Costs | Est. 20 year Material Costs | Avg. Material Costs Per Year |
|---|---|---|---|---|---|---|
| Red Jacket 4WS2132 Pumps | 3 | 12 | $3,667.00 | $11,001.00 | $18,335.00 | $916.75 |
| Pump Guide Rails | 2 | 20 | $1,553.00 | $3,106.00 | $3,106.00 | $155.30 |
| OPTI FLOAT Float Switches | 4 | 30 | $375.00 | $1,500.00 | $1,000.00 | $50.00 |
| Float Bar | 1 | 20 | $103.00 | $103.00 | $103.00 | $5.15 |
| | | | | $15,710.00 | $22,544.00 | $1,127.20 |

### CONTROL SYSTEM

| Part Name | Number of Parts | Estimated Life Span | Replacement Cost | Est. Replacement Costs | Est. 20 year Material Costs | Avg. Material Costs Per Year |
|---|---|---|---|---|---|---|
| AMC COMBO CONTROL PANEL | 1 | 50 | $23,000.00 | $23,000.00 | $9,200.00 | $460.00 |
| | | | | $23,000.00 | $9,200.00 | $460.00 |

| | | | |
|---|---|---|---|
| ESTIMATED TOTALS | $38,172.00 | $26,062.00 | $2,474.05 |
| ESTIMATED TOTAL ANNUALLY | | | $2,474.05 |
| | | ANNUALLY= | $2,474.05 |
| NUMBER OF CONNECTIONS: | 1 | MONTHLY= | $206.17 |

PO Box 340
421 Wheeler Ave.
Fredonia, WI 53021-0340 USA

Tel: 888-455-6864, 262-692-2416
Fax: 800-669-1232, 262-692-2418
E-Mail mail@petersen.cc

PETERSEN MANAGEMENT COMPANY

# ENERGY CONSUMPTION CALCULATION

| | # of Comp. | HP | Voltage | Phase | Amps | Watts | kWhrs | % Runtime | $/kWhr | $/Day | $/Month | $/Yr |
|---|---|---|---|---|---|---|---|---|---|---|---|---|
| Equalization Control | 1 | | 115 | 1 | 1 | 115 | 0.115 | 1 | $0.08 | $0.22 | $6.62 | $79.49 |
| Equalization Pump | 3 | 0.5 | 460 | 3 | 1.7 | 782 | 0.782 | 0.15 | $0.08 | $0.68 | $20.27 | $243.23 |
| MicroFAST Blower(s) | 3 | 4 | 460 | 3 | 5.9 | 2714 | 2.714 | 1 | $0.08 | $15.63 | $468.98 | $5,627.75 |
| Drainfield Controller | 1 | | 115 | 1 | 1 | 115 | 0.115 | 1 | $0.08 | $0.22 | $6.62 | $79.49 |
| Drainfield Dosing Pumps | 2 | 2 | 460 | 3 | 5.8 | 2668 | 2.668 | 0.15 | $0.08 | $1.54 | $46.10 | $553.24 |
| TOTALS | | | | | | | | | | $18.29 | $548.60 | $6,583.20 |

Reference

| UNIT | Blower | kwhr @ 220V1ph | Amps | kwhr @ 220V3ph | Amps | kwhr @ 460V3ph | Amps |
|---|---|---|---|---|---|---|---|
| MCF90 | Gast 5hp 1ph | 4.37 | 22.3 | | | | |
| | FPZ 4hp 3ph | | | 3.4 | 11.2 | 3.75 | 5.9 |
| MCF45 | Fuji 2.5hp 1ph | 2.53 | 11 | | | | |
| | Fuji 2.5hp 1ph | | | 2.5 | 6.2 | 2.47 | 3.1 |
| HSF45 | FPZ 3hp 1ph | 2.99 | 16 | | | | |
| | Fuji 4.5hp 3ph | | | 4.38 | 11 | 4.38 | 5.5 |
| HSF90 | Spncr 7.5hp 3ph | | | 6.84 | 17.2 | 6.84 | 8.6 |

# TURN-KEY WATER MANAGEMENT SYSTEMS

## FLOWPOINT

- COST REDUCTION
- ACCOUNTABILITY
- ENVIRONMENTAL COMPLIANCE
- REVENUE GENERATION
- SECURITY

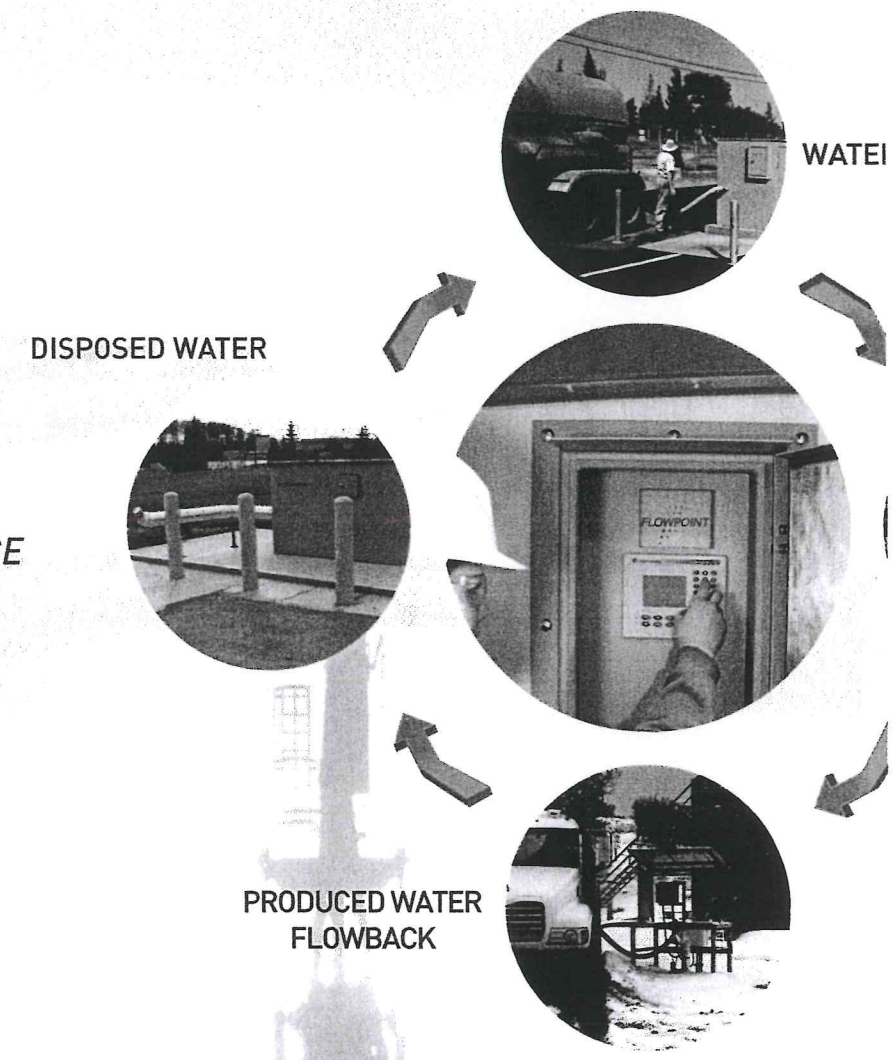


WWW.FLOWPOINTSYSTEMS.COM

# System Administration Software

*The cornerstone of our Waste Water Receiving Stations is the Windows based* **Disposal+™** *System Administration Software. It is the tool you need to control, monitor and analyze your waste water receiving and allows you to centrally manage multiple stations.*

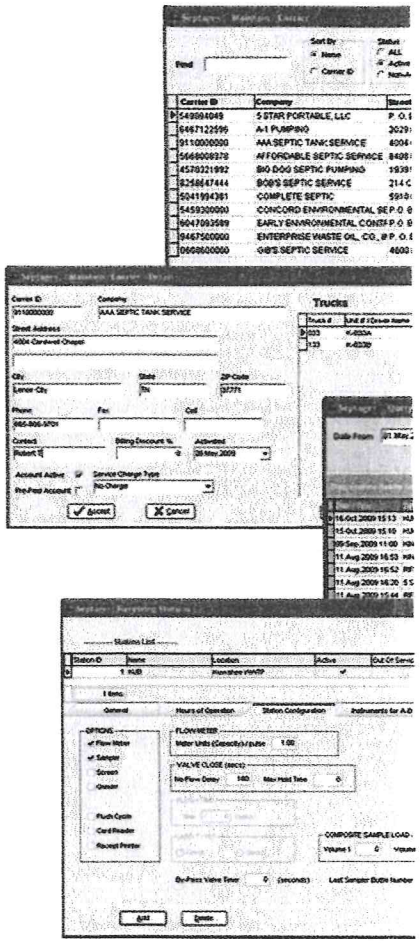

## What can Disposal+™ do for you?

### Provide Security by Controlling:

#### Hours of operation
- You control when your station is open for business

#### Who is using your facility
- Verify authorized users (hauler and driver prior to dumping a load)
- Verify waste generator (where waste originated from)

#### What is being dumped
- Verify quality of waste water (prior to dumping a load)
- Measure PH and/or conductivity (close inlet valve outside of parameters)
- Sample loads (every load or randomly)

### Generate Revenue:

#### $$$ for waste water receiving
- Charge for quality and quantity of waste water dumped
- Charge a monthly connection fee for account administration

### Reduce Administration Cost:

#### Account Management
- Set up customer account information (i.e. drivers, sample frequency, etc.)
- Instant activation or deactivation of accounts
- Adjustable billing rates
- Automated billing
- Flexible Customer Payment Options (Account, Pre-pay or Credit Card)

#### Station Management
- Station option set up (i.e. flow meter pulse rate, connection to sampler, grinder, etc.)
- Connectivity set up
- Keyless/cardless access (provide security without the administration of keys or cards)

#### System Management
- Historical/statistical reporting (by station, customer, quantity and quality)
- Easily interfaces to Municipal Accounting Software via ODBC, eliminating duplicate data entry

#### Communication Connectivity Options:
- Direct (Serial or Ethernet)
- Cellular Wireless (1X)
- Dial-up (Serial)
- Radio (Serial or Ethernet)

FLOWPOINT

Toll Free: 1.877.655.5585
www.flowpoint systems.com

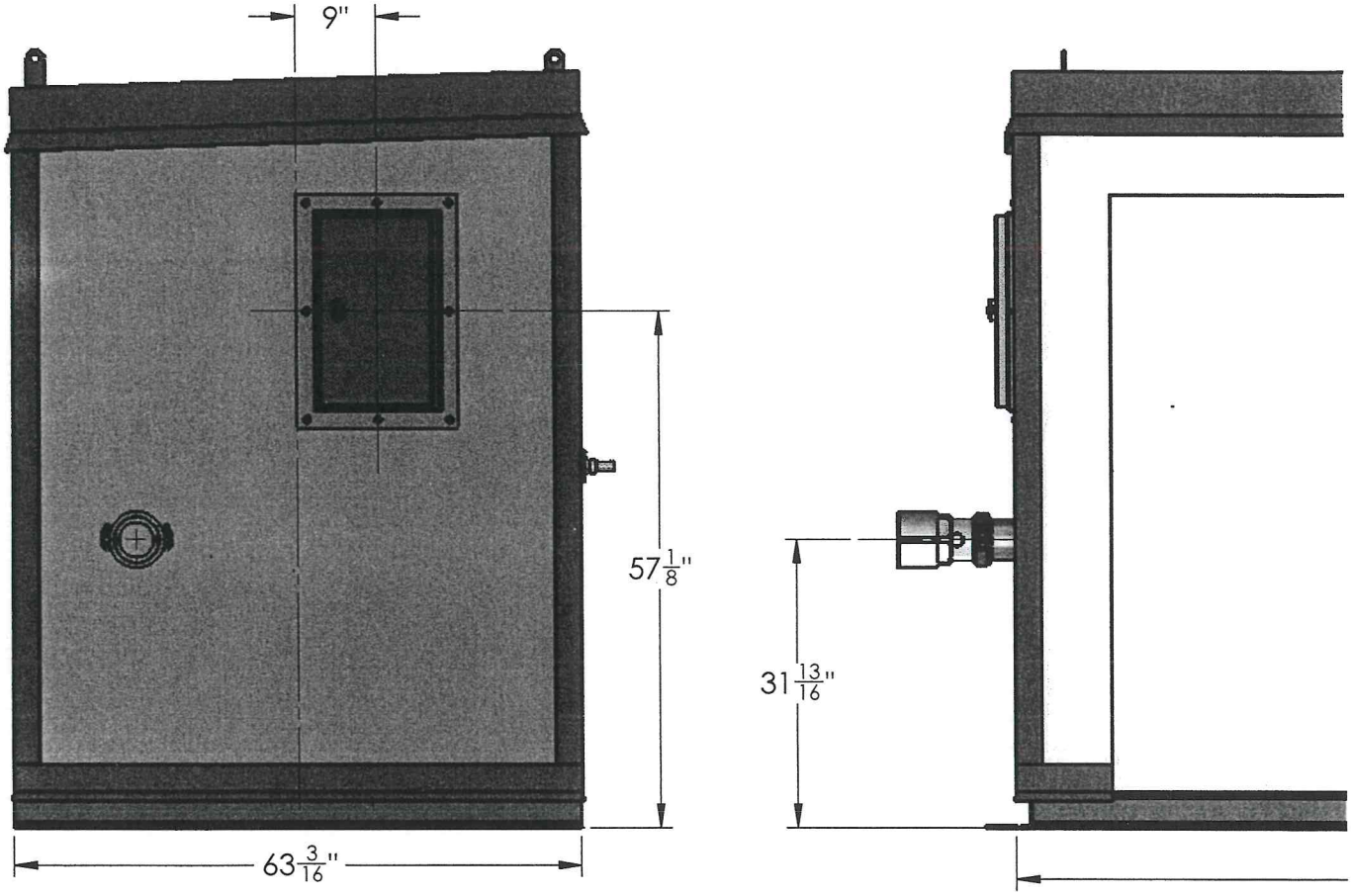


| # | DR | CH | REVISION DETAILS | APPD | DATE |
|---|---|---|---|---|---|
| - | - | - | - | - | - |
| - | - | - | - | - | - |

THIS DO
OF FLO
SYSTEM
PROPRI
INFORM
REPROD
WITHO
PERMIS
ENVIRO
INFORM
TO BE C
PROPER
ENVIRO

| ITEM NO. | PART NUMBER | DESCRIPTION | QTY. |
|---|---|---|---|
| 1 | 3/4" x 1/2" 316SS BARBED CONNECTOR | 3/4" x 1/2" 316SS BARBED SAMPLER ADAPTER | 2 |
| 2 | 4" SCH10 - 316SS | 4" SCH10 316SS 12" x GBE | 1 |
| 3 | 4" SCH10 - 316SS | 4" SCH10 316SS 14" x GBE | 1 |
| 4 | 4" SCH10 - 316SS | 4" SCH10 316SS 16" x GBE | 1 |
| 5 | 4" SCH10 - 316SS | 4" SCH10 316SS 4" x GBE | 4 |
| 6 | 4" SCH10 - 316SS | 4" SCH10 316SS 6" x GBE | 1 |
| 7 | 4" SCH10 - 316SS | 4" SCH10 316SS 16" x 1 1/2" BRANCH GBE | 1 |
| 8 | 4" SCH10 - 316SS | 4" SCH10 316SS 4" GOE x TOE | 1 |
| 9 | 90° CONDUIT ELBOW - 3/4" | CONDUIT FITTING - 90° PULL ELBOW | 1 |
| 10 | B - LINE - B102 | STRUT-B-LINE-THREE HOLE CORNER ANGLE | 2 |
| 11 | B - LINE - B129 | STRUT-B-LINE-2 HOLE SPLICE PLATE | 4 |
| 12 | B - LINE - B141 | STRUT-B-LINE-3 HOLE SPLICE PLATE | 2 |
| 13 | B - LINE - B267L | STRUT-B-LINE-WINGED BRACKET LEFT | 5 |
| 14 | B - LINE - B267R | STRUT-B-LINE-WINGED BRACKET RIGHT | 1 |
| 15 | B-LINE - B24 | STRUT - B-LINE 1 5/8" x 1 5/8" x 86" 1G | 1 |
| 16 | B-LINE - B24 | STRUT - B-LINE 1 5/8" x 1 5/8" x 42 3/8" 1G | 3 |
| 17 | B-LINE - B24 | STRUT - B-LINE 1 5/8" x 1 5/8" x 49" 1G | 1 |
| 18 | B-LINE - B24 | STRUT - B-LINE 1 5/8" x 1 5/8" x 56" 1G | 2 |
| 19 | B-LINE - B24 | STRUT - B-LINE 1 5/8" x 1 5/8" x 56 3/4" 1G | 2 |
| 20 | B-LINE - B202 | STRUT-B-LINE-SQUARE WASHER | 2 |
| 21 | BOLT-HEX - 1/2" x 1 1/4" PL | 1/2" x 1 1/4" NC GR 5 PL CAP SCREW | 24 |
| 22 | BOLT-SELF TAPPING - 3/8"x1" PL | 3/8" x 1" PL BT THREAD BOLT | 18 |
| 23 | BRAY - S70-050 | ACTUATOR - ELECTRIC ROTARY MOTION ACTUATOR | 1 |
| 24 | CAMLOCK FEMALE 4" | 4" D400AL - ALUMINUM FEMALE CAMLOCK | 1 |
| 25 | CARLON - E9963 .75 | CARLON - PVC BOX ADAPTER 3/4" | 4 |
| 26 | Ci-6104 | 1/2" STRAIGHT LT CONN | 3 |
| 27 | Ci-6304 | 1/2" 90° LT CONN | 1 |
| 28 | CLAMP - 4" PL | 4" PL CUSH CLAMP | 2 |
| 29 | COLUMBIA - EAS-CSA.5 | CONDUIT - 1/2" x 36" LT FLEX METAL | 1 |
| 30 | CONDUIT CLAMP - 3/4" GALV | 3/4" GALV CONDUIT CLAMP | 3 |
| 31 | E&H-4-53W1H-UL0B5RA0BAAA | 4" PROMAG-4-53W1H-PL0B5RA0BAAA | 1 |
| 32 | EATON - CPL072R | PANEL LOAD CENTER | 1 |
| 33 | BOLT-HEX 1/4"x1" PL | 1/4" x 1" GR 5 PL CAP SCREW | 2 |
| 34 | EATON - BR120 | BREAKER - 1 POLE 20 AMP PLUG IN | 1 |
| 35 | EATON - BR115 | BREAKER - 1 POLE 15 AMP PLUG IN | 1 |
| 36 | NUT-SPRING- 1/4" x PL | NUT-SPRING- 1/4" x PL | 10 |
| 37 | ENCLOSURE - 30"x24" FTB | 30"x24" HAMMOND ECLIPSE ENCLOSURE | 1 |
| 38 | ENERPAN - SG-CLAD | ENCLOSURE-ENERPAN-SEWAGE GENERAL CLAD/INS | 1 |
| 39 | HACH - 61313-00 | HACH - pH SENSOR1 1/2" UNION MOUNT | 1 |
| 40 | HACH - DPD1P1 | HACH GENERAL PURPOSE pH PROBE | 1 |
| 41 | HEATER-WALL INSERT 1500W 120V WHITE | STELPRO-RWF-1501-W | 1 |
| 42 | HEATER-SURFACE ADAPTER FOR RWF WHITE | STELPRO-RWF-SA-W | 1 |
| 43 | BOLT-HEX 1/4"x1" PL | 1/4" x 1" GR 5 PL CAP SCREW | 8 |
| 44 | STELPRO-RWF-T1-W | HEATER-STAT KIT FOR RWF WHITE | 1 |
| 45 | B-LINE - B54 | STRUT - 13/16" x 1 5/8" x 9 5/8" 1G | 2 |
| 46 | IBERVILLE - CI1704 | CONNECTOR-IBERVILLE-1/2" STEEL LOCKNUT | 1 |
| 47 | IBERVILLE - CI1706 | CONNECTOR-IBERVILLE-3/4" STEEL LOCKNUT | 3 |
| 48 | IPEX-1825 | REDUCER-THREADED BUSHING | 1 |
| 49 | IPEX - 1825 | REDUCER-IPEX-THREADED BUSHING | 1 |
| 50 | IPEX - PVC .75 | CONDUIT - PVC 3/4" x 15' | 1 |
| 51 | IPEX - TA15 | ADAPTOR-IPEX-TERMINAL ADAPTOR PVC 3/4" | 4 |
| 52 | IPEX-EC15 | COUPLING - PIPE COUPLING PVC 3/4" | 5 |
| 53 | IPEX-EE1545 | ELBOW-IPEX-45° ELBOW PVC 3/4" | 2 |
| 54 | IPEX-EE1590 | ELBOW-IPEX-90° ELBOW PVC 3/4" | 7 |
| 55 | IPEX-SLB20S | CONNECTOR-IPEX-LB PVC 3/4" | 2 |
| 56 | IPEX-ST20S | CONNECTOR-TEE PVC 3/4" | 2 |
| 57 | NUT-HEX - 5/8" GALV | 5/8" NC GR 5 GALV HEX NUT | 64 |
| 58 | MPB Building | DUAL WATER GENERAL - 93" x 63" x 78" TALL BASE FRAME | 1 |
| 59 | NUT-SPRING- 1/2" x PL | 1/2"x NC PL SPRING NUT | 40 |
| 60 | NUT-SPRING- 3/8" x PL | 3/8"x NC PL SPRING NUT | 4 |
| 61 | VALVE - ACTUATOR COUPLING | AUTOMATIC ACTUATOR COUPLING | 1 |
| 62 | WWXXXXXXXXXXEX1UXXXXXXXX | WATER WALL MOUNT ACCESS TERM, ETHERNET, US GALLONS | 1 |
| 63 | WASHER-LOCK - 1/2" PL | 1/2" PL LOCK WASHER | 24 |
| 64 | WASHER-FLAT - 5/8" GALV | 5/8" SAE GALV FLAT WASHER | 64 |
| 65 | WASHER-FLAT - 3/8" GALV | 3/8" SAE GALV FLAT WASHER | 26 |
| 66 | STUD - 5/8"x4" GALV | STUD - 5/8"x4" NC B7 GALV FULLY THREADED STUD | 32 |
| 67 | T&B - CPC075 | PIPE CLAMP - T&B - 3/4" CONDUIT PIPE CLAMP | 4 |
| 68 | UNISTRUT P1458 | UNISTRUT P1458 | 4 |
| 69 | VICTAULIC 4" - 741 | 4" 741 - PAINTED FLANGE ADAPTER | 5 |
| 70 | VICTAULIC 4" - 411SS | 4" 411SS - 316SS 45° ELBOW | 1 |
| 71 | VALMATIC - 5804RN | VALVE - 4" CAMCENTRIC PLUG VALVE | 1 |
| 72 | VICTAULIC 4" - 411SS | 4" 411SS - 316SS 45° ELBOW | 3 |
| 73 | VICTAULIC 4" -107 | 4" 107 - GALVANIZED RIGID COUPLING | 11 |
| 74 | B-LINE - B280SQ | STRUT - POST BASE | 4 |
| 75 | WASHER-LOCK - 1/2" PL | 1/2" PL LOCK WASHER | 16 |
| 76 | B-LINE - B24 | STRUT - B-LINE 1 5/8" x 1 5/8" x 22 3/4" 1G | 2 |
| 77 | BRACKET- 001 | SUPPORT-BRACKET-FLANGE-PLATE | 4 |
| 78 | BOLT-HEX - 1/2" x 1 1/4" PL | 1/2" x 1 1/4" NC GR 5 PL CAP SCREW | 16 |
| 79 | B-LINE - B24 | STRUT - B-LINE 1 5/8" x 1 5/8" x 9 1/4" 1G | 2 |

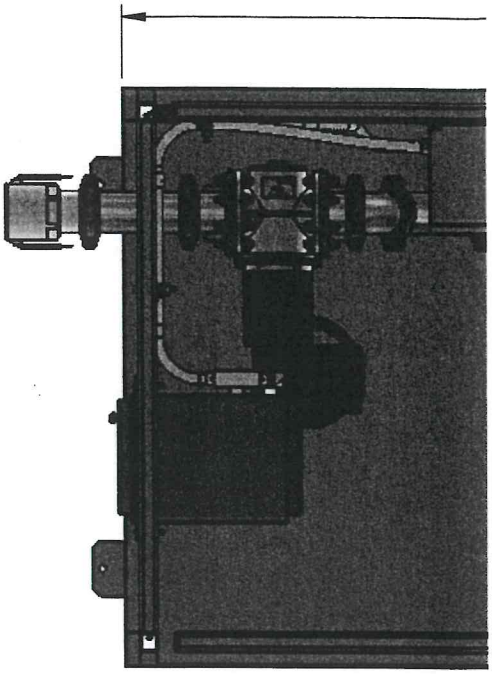

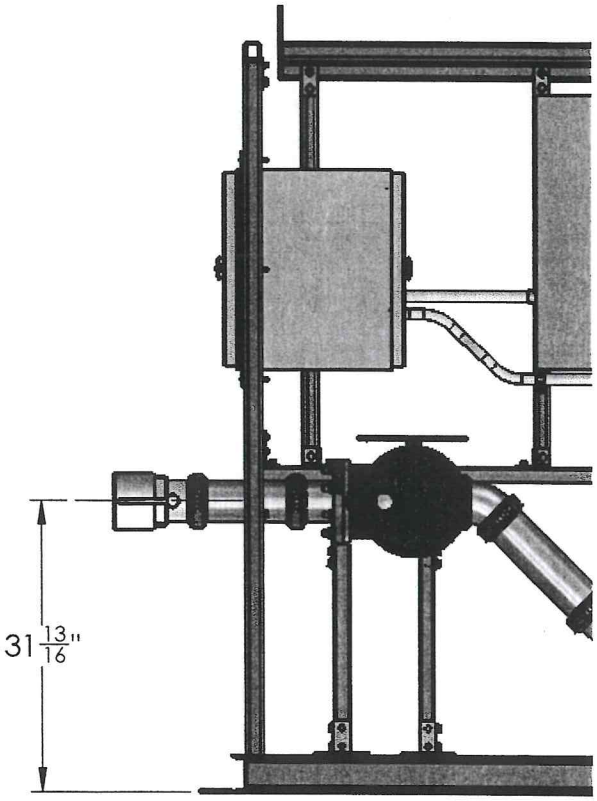


| # | DR | CH | REVISION DETAILS | APPD | DATE |
|---|---|---|---|---|---|
| - | - | - | - | - | - |
| - | - | - | - | - | - |

THIS DO
OF FLO
SYSTEM
PROPRI
INFORM
REPROD
WITHOU
PERMIS
ENVIRO
INFORM
TO BE C
PROPER
ENVIRO

| ITEM NO. | PART NUMBER | DESCRIPTION | QTY. |
|---|---|---|---|
| 1 | 3/4" x 1/2" 316SS BARBED CONNECTOR | 3/4" x 1/2" 316SS BARBED SAMPLER ADAPTER | 2 |
| 2 | 4" SCH10 - 316SS | 4" SCH10 316SS 12" x GBE | 1 |
| 3 | 4" SCH10 - 316SS | 4" SCH10 316SS 16" x GBE | 1 |
| 4 | 4" SCH10 - 316SS | 4" SCH10 316SS 14" x GBE | 1 |
| 5 | 4" SCH10 - 316SS | 4" SCH10 316SS 4" x GBE | 1 |
| 6 | 4" SCH10 - 316SS | 4" SCH10 316SS 6" x GBE | 1 |
| 7 | 4" SCH10 - 316SS | 4" SCH10 316SS 16" x 1 1/2" BRANCH GBE | 1 |
| 8 | 4" SCH10 - 316SS | 4" SCH10 316SS 4" x GBE | 3 |
| 9 | 4" SCH10 - 316SS | 4" SCH10 316SS 4" GOE x TOE | 1 |
| 10 | B-LINE - B24 | STRUT - B-LINE 1 5/8" x 1 5/8" x 22 3/4" 1G | 2 |
| 11 | B-LINE - B24 | STRUT - B-LINE 1 5/8" x 1 5/8" x 9 1/4" 1G | 2 |
| 12 | B-LINE - B280SQ | STRUT - POST BASE | 4 |
| 13 | BOLT-HEX - 1/2" x 1 1/4" PL | 1/2" x 1 1/4" NC GR 5 PL CAP SCREW | 16 |
| 14 | BRACKET- 001 | SUPPORT-BRACKET-FLANGE-PLATE | 4 |
| 15 | BRAY - S70-050 | ACTUATOR - ELECTRIC ROTARY MOTION ACTUATOR | 1 |
| 16 | CAMLOCK FEMALE 4" | 4" D400AL - ALUMINUM FEMALE CAMLOCK | 1 |
| 17 | E&H-4-53W1H-UL0B5RA0BAAA | 4" PROMAG-4-53W1H-PL0B5RA0BAAA | 1 |
| 18 | HACH - 61313-00 | HACH - pH SENSOR1 1/2" UNION MOUNT | 1 |
| 19 | HACH - DPD1P1 | HACH GENERAL PURPOSE pH PROBE | 1 |
| 20 | NUT-HEX - 5/8" GALV | 5/8" NC GR 5 GALV HEX NUT | 64 |
| 21 | NUT-SPRING- 1/2" x PL | 1/2"x NC PL SPRING NUT | 16 |
| 22 | STUD - 5/8"x4" GALV | STUD - 5/8"x4" NC B7 GALV FULLY THREADED STUD | 32 |
| 23 | VALMATIC - 5804RN | VALVE - 4" CAMCENTRIC PLUG VALVE | 1 |
| 24 | VALVE - ACTUATOR COUPLING | AUTOMATIC ACTUATOR COUPLING | 1 |
| 25 | VICTAULIC 4" -107 | 4" 107 - GALVANIZED RIGID COUPLING | 11 |
| 26 | VICTAULIC 4" - 411SS | 4" 411SS - 316SS 45° ELBOW | 3 |
| 27 | VICTAULIC 4" - 411SS | 4" 411SS - 316SS 45° ELBOW | 1 |
| 28 | VICTAULIC 4" - 741 | 4" 741 - PAINTED FLANGE ADAPTER | 5 |
| 29 | WASHER-FLAT - 5/8" GALV | 5/8" SAE GALV FLAT WASHER | 64 |
| 30 | WASHER-LOCK - 1/2" PL | 1/2" PL LOCK WASHER | 16 |

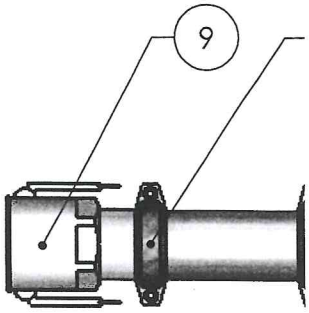


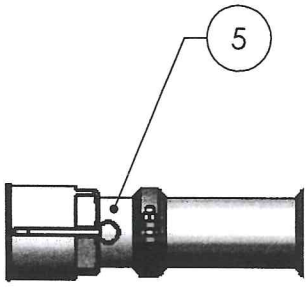


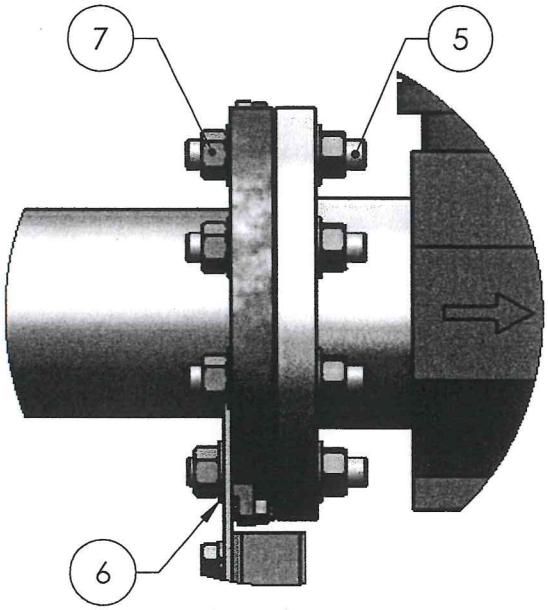


DETAIL A
SCALE 1 : 4

| # | DR | CH | REVISION DETAILS | APPD | DATE |
|---|---|---|---|---|---|
| - | - | - | - | - | - |
| - | - | - | - | - | - |

THIS DO
OF FLO
SYSTEM
PROPR
INFORM
REPROD
WITHO
PERMIS
ENVIRO
INFORM
TO BE
PROPE
ENVIRO

Allen-Bradley
PanelView Plus 400
7 8 9
4 5 6
1 2 3
0
SHIFT
ESC CTRL ALT
F1 F2 F3 F4
F5 F6 F7 F8